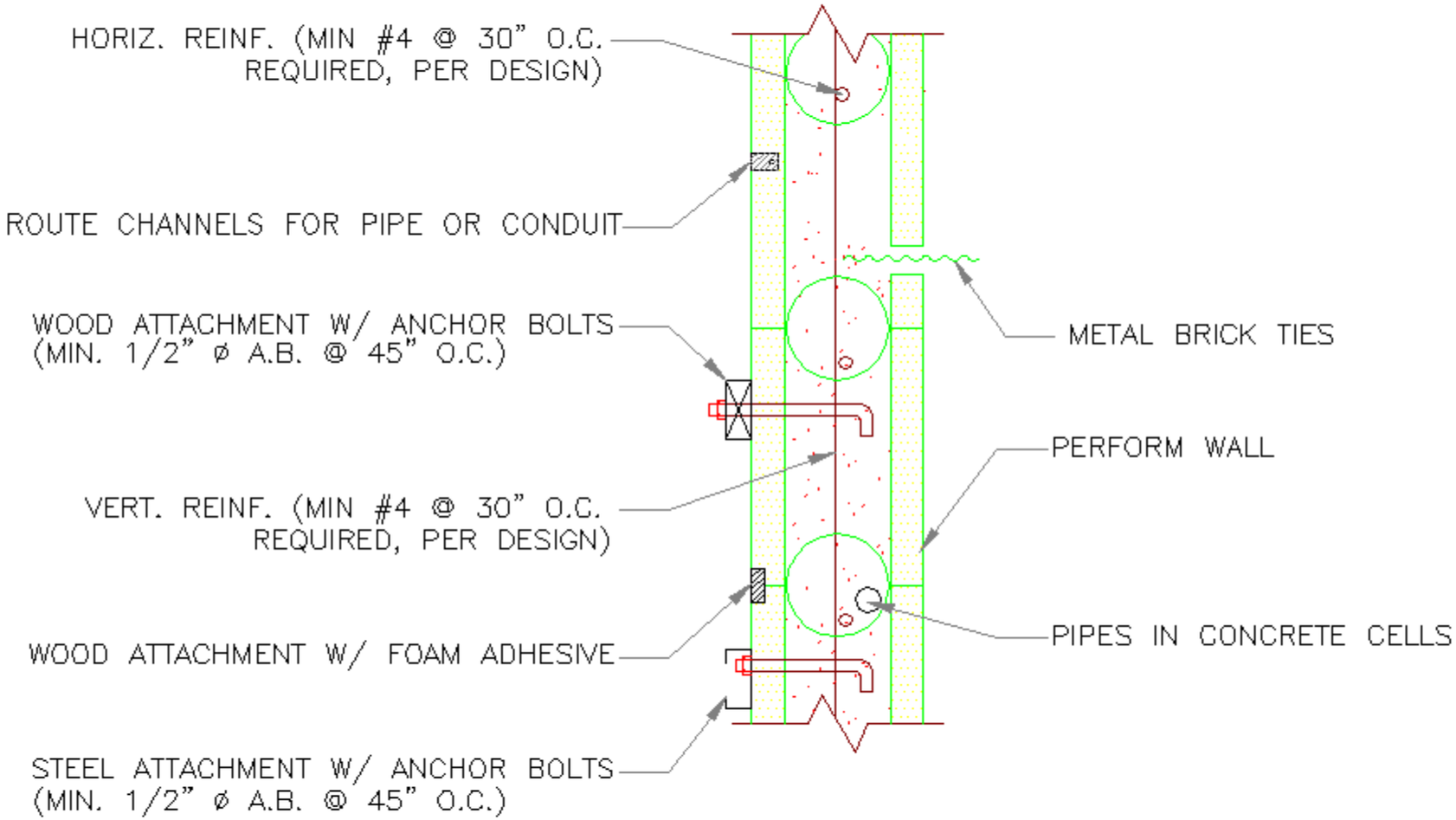

MISCELLANEOUS WALL CONNECTIONS